HiluX D10

GU10 recessed downlight housing — indoor (IP21) and outdoor (IP44)

TECHNICAL DATA

Product type	**Recessed downlight housing, without light source**
Lamp socket	**GU10**
Maximum lamp power	**7 W LED**
Voltage	**220–230 V AC**
Luminous flux, colour temperature, colour rendering, beam angle	**Determined by the GU10 lamp fitted**
IP rating	**IP21 (indoor version) / IP44 (outdoor version)**
Intended use	**Indoor / outdoor**
Tilt	**25°**
Cut-out diameter	**Ø 76 mm**
Outer diameter	**Ø 88 mm**
Recessed height	**62 mm**
Max. ceiling thickness	**33 mm**
T-max	**50 °C**
Wiring	**Tool-free loop-through spring terminals, max 3 × 2.5 mm²**
Fixing	**Torx10 screw mounting**
Insulation	**May be installed directly in insulation, no spacer required**
Colour	**White / black**
Warranty	**2 years**

FEATURES

- May be mounted directly in insulation, without a spacer.
- IP21 indoor version and IP44 outdoor version, approved for outdoor mounting.
- Tool-free loop-through wiring; easy and secure Torx10 screw mounting.
- Tiltable 25° for directional lighting.
- Cut-out Ø 76 mm and a recessed height of only 62 mm; accepts approximately 98 % of all GU10 lamps.
- No visible locking ring — the lamp is fitted from the rear.

VARIANTS

HiluX D10 — recessed downlight housing, without light source

EAN	ITEM NUMBER	VERSION
5714255000924	80-858-i-hvid	Indoor · White
5714255000948	80-858-i-sort	Indoor · Black
5714255001280	80-858-u-hvid	Outdoor · White
5714255001297	80-858-u-sort	Outdoor · Black

INSTALLATION

1. To be installed by an authorised electrician only.
2. Make sure that the supply cable does not touch the luminaire after installation.
3. Use 70 °C cables; use 90 °C cables where the cable touches the lamp cylinder.

The light source is not included. Luminous flux, colour temperature, colour rendering and beam angle are determined by the GU10 lamp fitted, and no energy-efficiency class is stated for the housing.

Technical data are subject to change without notice. Installation must comply with national wiring regulations.

HiluX D10

Dimensional drawing

DIMENSIONS

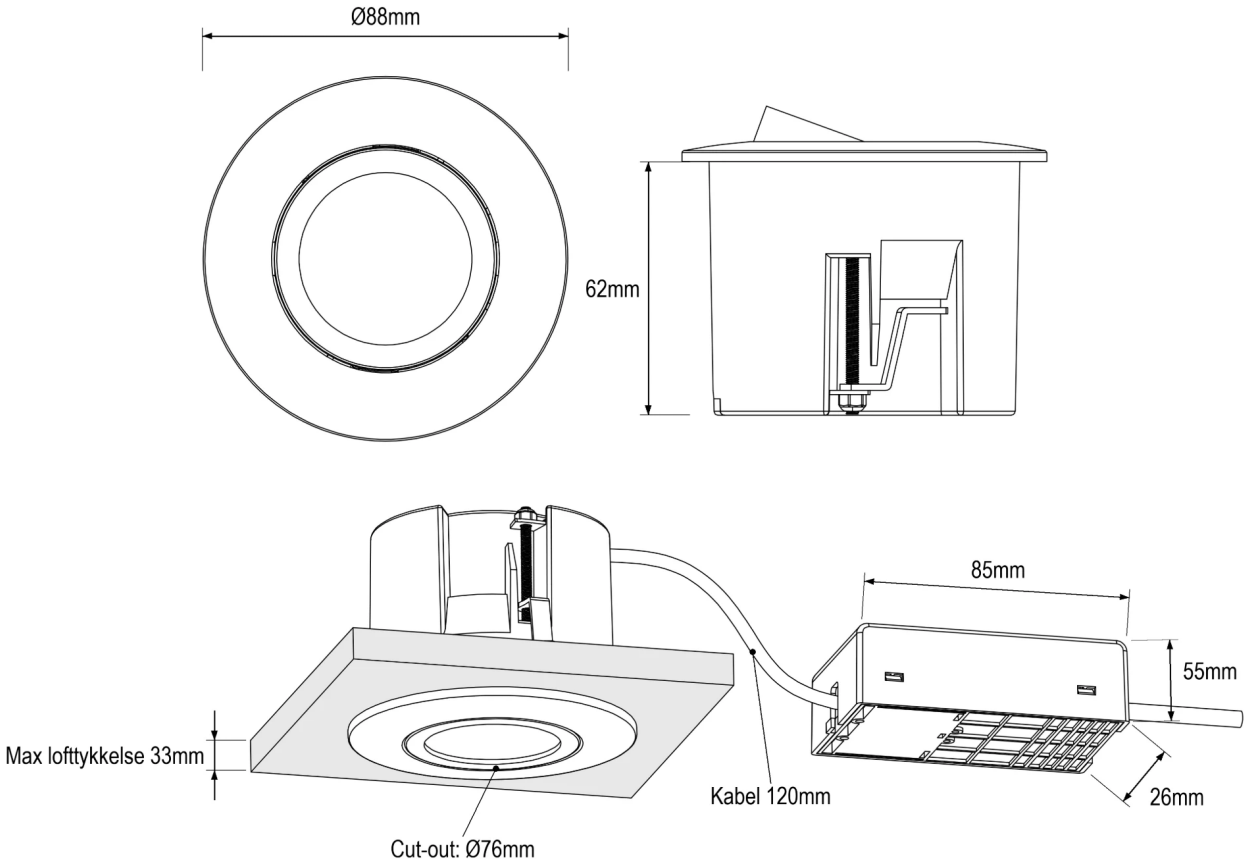

Outer diameter	**Ø 88 mm**
Recessed height	**62 mm**
Cut-out diameter	**Ø 76 mm**
Max. ceiling thickness	**33 mm**
Supply cable	**120 mm**
Connection box	**85 × 55 × 26 mm**

Technical data are subject to change without notice. Installation must comply with national wiring regulations.